NOTE WELL:
1. Both LCD and Keypad pin 1 must be on the West of the board.
2. Some LCD segments can't be mapped due to pin limits. Sorry.
3. P1.5 and P1.6 double as a UART for the BSL. (!RST and TST also required.)
4. Radio support is missing from this revision.
5. Some traces might be too long or awkwardly routed in this revision.

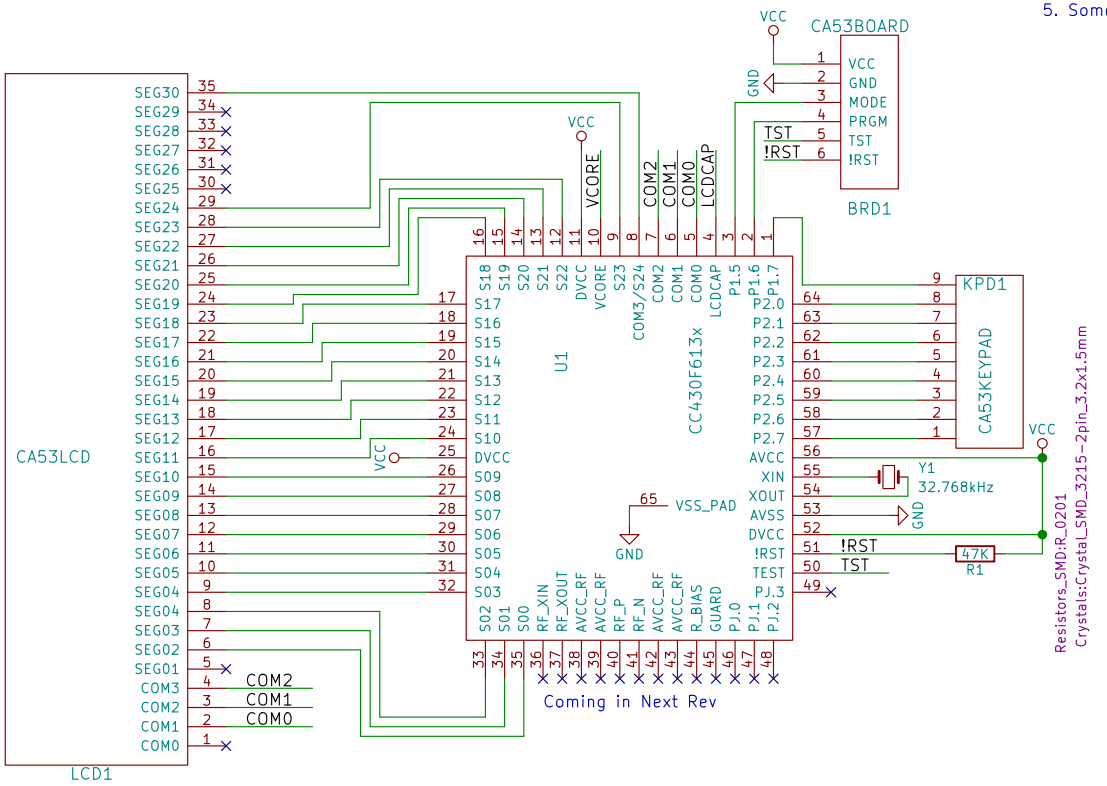

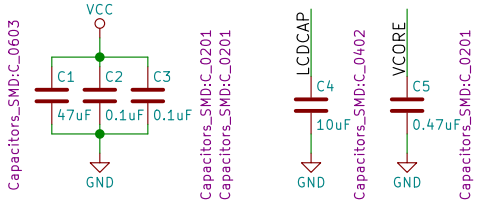

Resistors_SMD:R_0201
Crystals:CrystaL_SMD_3215-2pin_3.2x1.5mm

Replacement PCB for the Casio CA53W built around the CC430F6137.
by Travis Goodspeed

Sheet: /
File: goodwatch10.sch

Title: GoodWatch Rev 10

Size: A4	Date:	**Rev:** 10 (WIP)
KiCad E.D.A. kicad 4.0.7		Id: 1/1