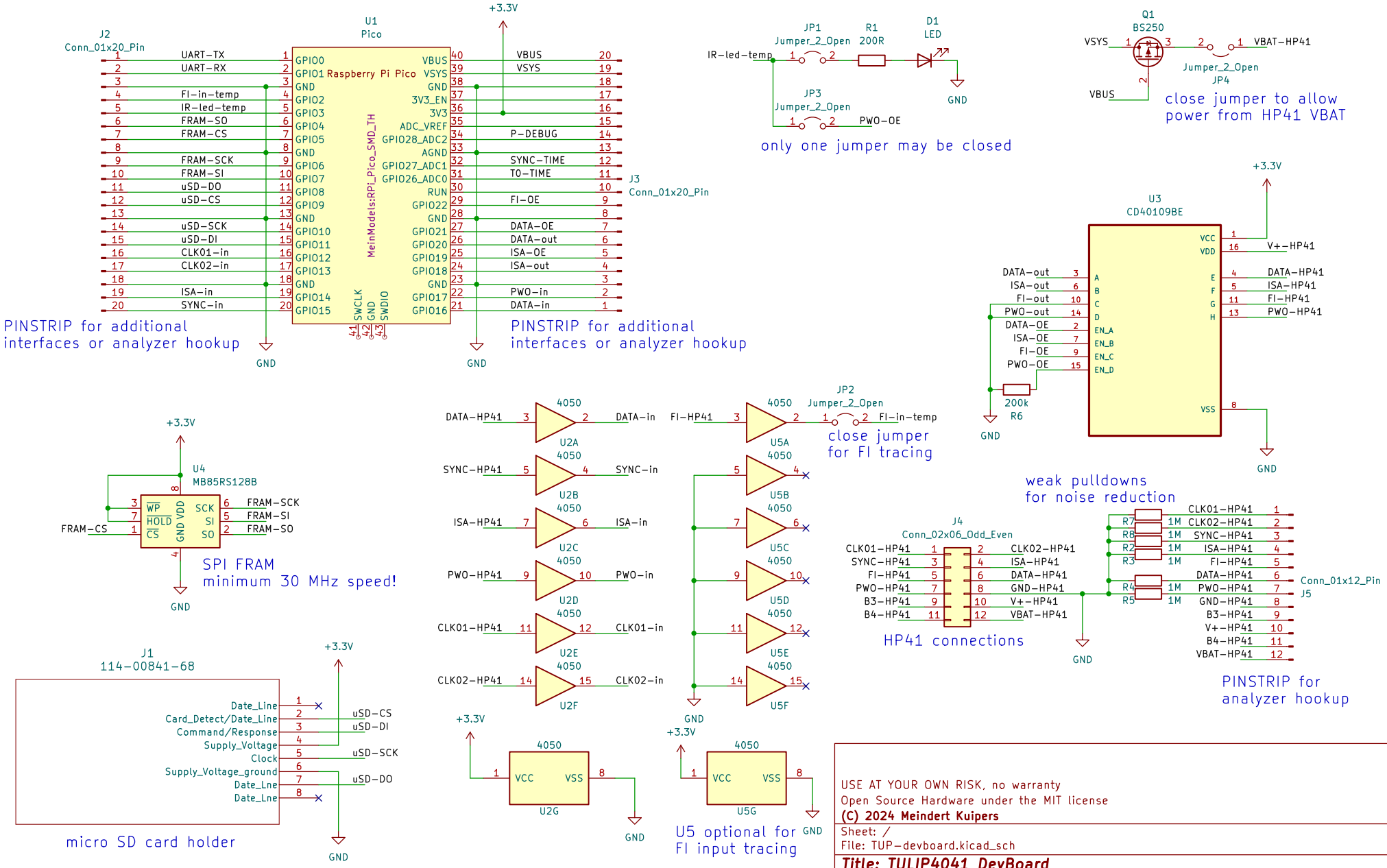

USE AT YOUR OWN RISK, no warranty
Open Source Hardware under the MIT license
(C) 2024 Meindert Kuipers

Sheet: /
File: TUP-devboard.kicad_sch

Title: TULIP4041 DevBoard

Size: A4	Date: July 2024	**Rev: 1.1**
KiCad E.D.A. 8.0.3		Id: 1/1